HC-Sinus Slide®
Repair Joint

STEEL QUALITY	EN 10025 - SJ235, cold drawn NBN A 24-302 - BE 500 TS EN 10111:2008 - DD14
MATERIAL THICKNESS	2 x 5 mm (13/64”)
PROFILE LENGTHS	2,60 m (+5 / -10 mm) (8.53 ft +13/64” / - 25/64”)
JOINT OPPENING	Optimal up to 15 mm (19/32”)
ANCORAGE STUDS	3 mm (1/8”) flat rectangular bar for connecting of anchorage bolts, distance 243 mm (9 9/16”) + Ø6 mm (15/64”) U-shaped horizontal stirrups
VERSIONS	Black steel / galvanized / stainless Pre-opening with polyethylene foam 5 mm (13/64”) Optional, installation and levelling help available

Height [mm] (inch)	Weight [kg/m] (lbs/ft)	Weight [kg/pc] (lbs/pc.)	Quantity [pcs./pal.]	Quantity [m/pal.] (ft/pal.)	Gross weight [kg/pal.] (lbs/pal.)
35 (1 3/8)	4,31 (2.90)	12,93 (28.51)	70	182 (597)	784 (1728)
50 (1 31/32)	5,66 (3.80)	16,99 (37.46)	70	182 (597)	1030 (2270)
60 (2 23/64)	6,48 (4.35)	19,44 (42.86)	70	182 (597)	1179 (2599)
80 (3 5/32)	8,49 (5.71)	25,46 (56.13)	70	182 (597)	1545 (3406)

Other heights and custom solutions are possible upon request.

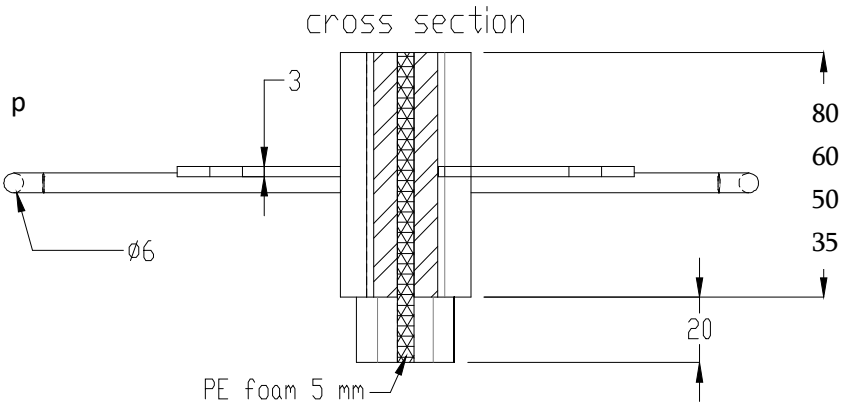

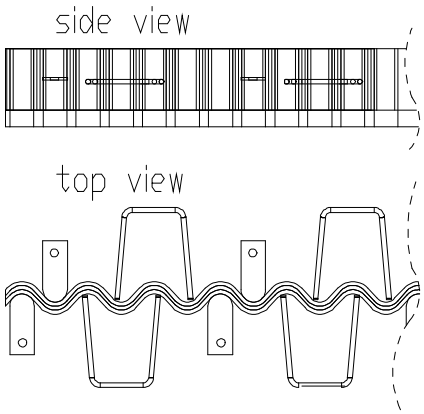

Document issued October 2021. Hengelhoef Concrete Joints nv. reserves the right to alter the products without notice.
©COPYRIGHT 2021 by Hengelhoef Concrete Joints nv.

HENGELHOEF CONCRETE JOINTS

Hengelhoefstraat 158, Poort Genk 0420, B-3600 Genk
T. +32 (0)89 32 39 80 · F. +32 (0)89 32 39 88
E. info@hcjoints.be

www.hcjoints.be